Practice Sheet-1 for Class Test-1 of CSE 19th Batch

EEE 1161

1.	(a) Find V_1, V_2, V_3, V_4 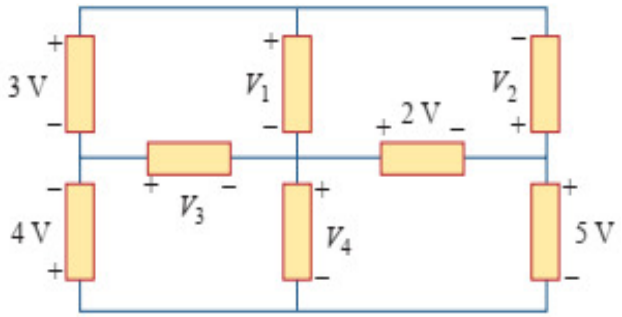	(b) Determine R_T, I, and V_2 for the circuit 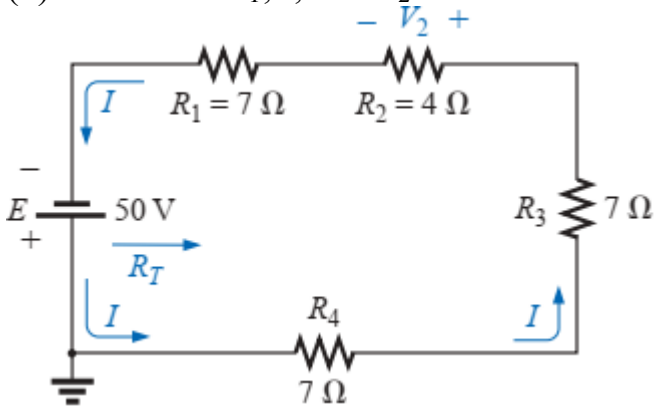
2.	(a) Calculate V_x by node analysis 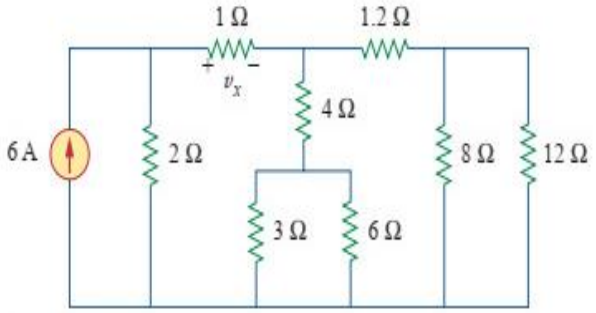	(b) Calculate V_1 & V_2 by node analysis 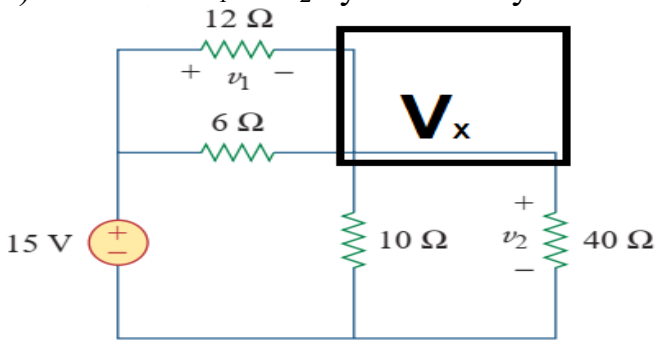
3.	Determine R_{ab} in Fig. 3(a) or Fig. 3(b)	
	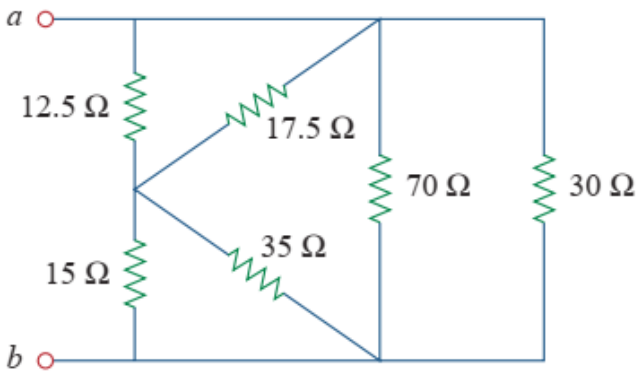 Fig. 3(a)	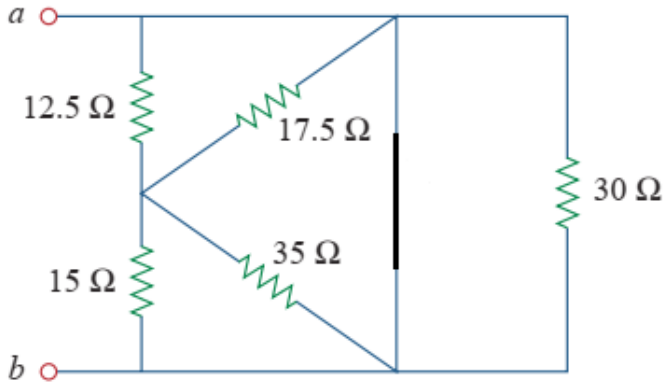 Fig. 3(b)
4.	(a) Find V_0 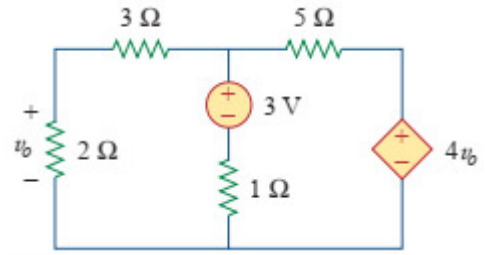	(b) Find V_x 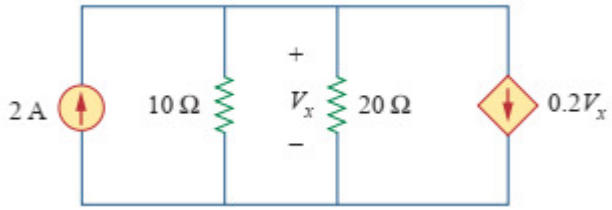

5.	(a) Find I_1, I_2 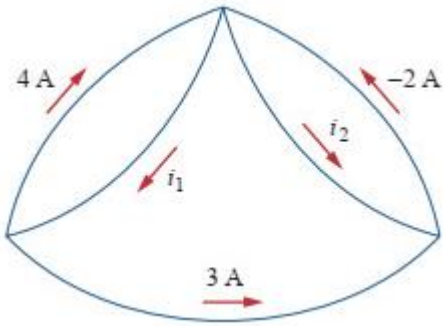 	(b) Count node, mesh and element 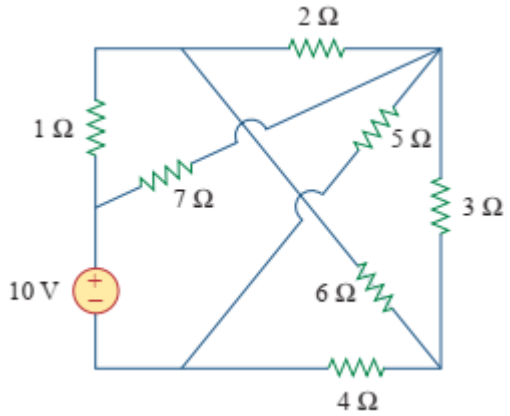
6.	(a) Calculate V_1, V_2 and V_3 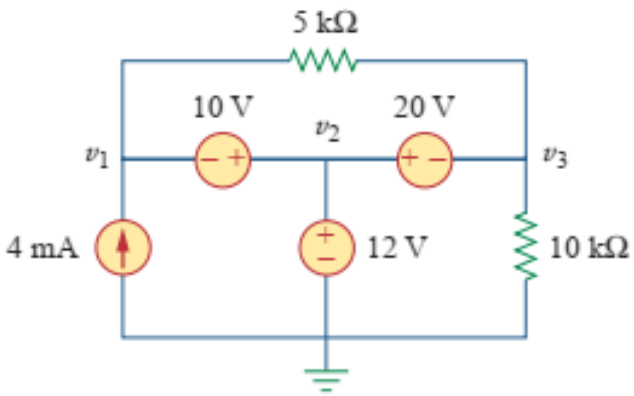 	(b) Calculate node voltage 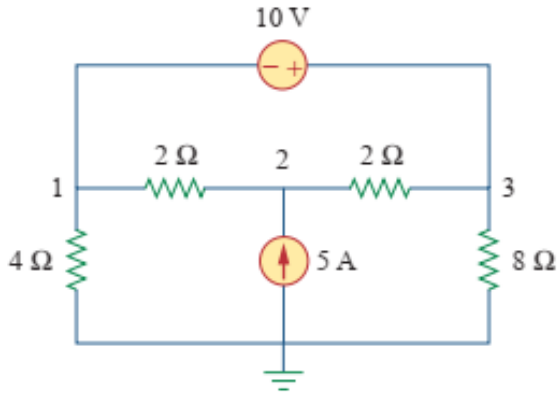
7.	Determine R_{ab} in Fig. 3(a) or Fig. 3(b) 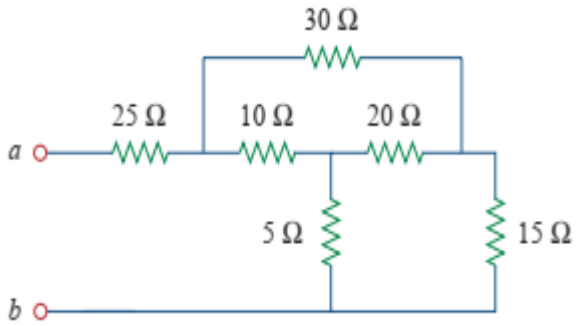 Fig. 7(a)	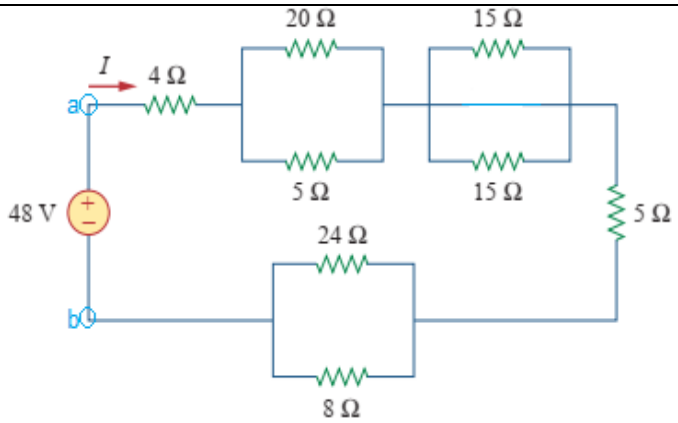 Fig. 7(b)
8.	(a) Find i_0 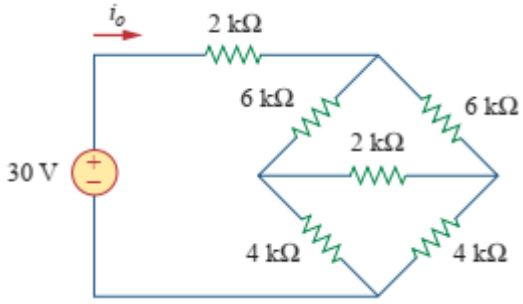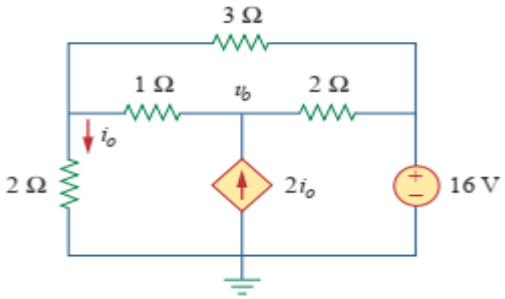 	(b) Find V_0